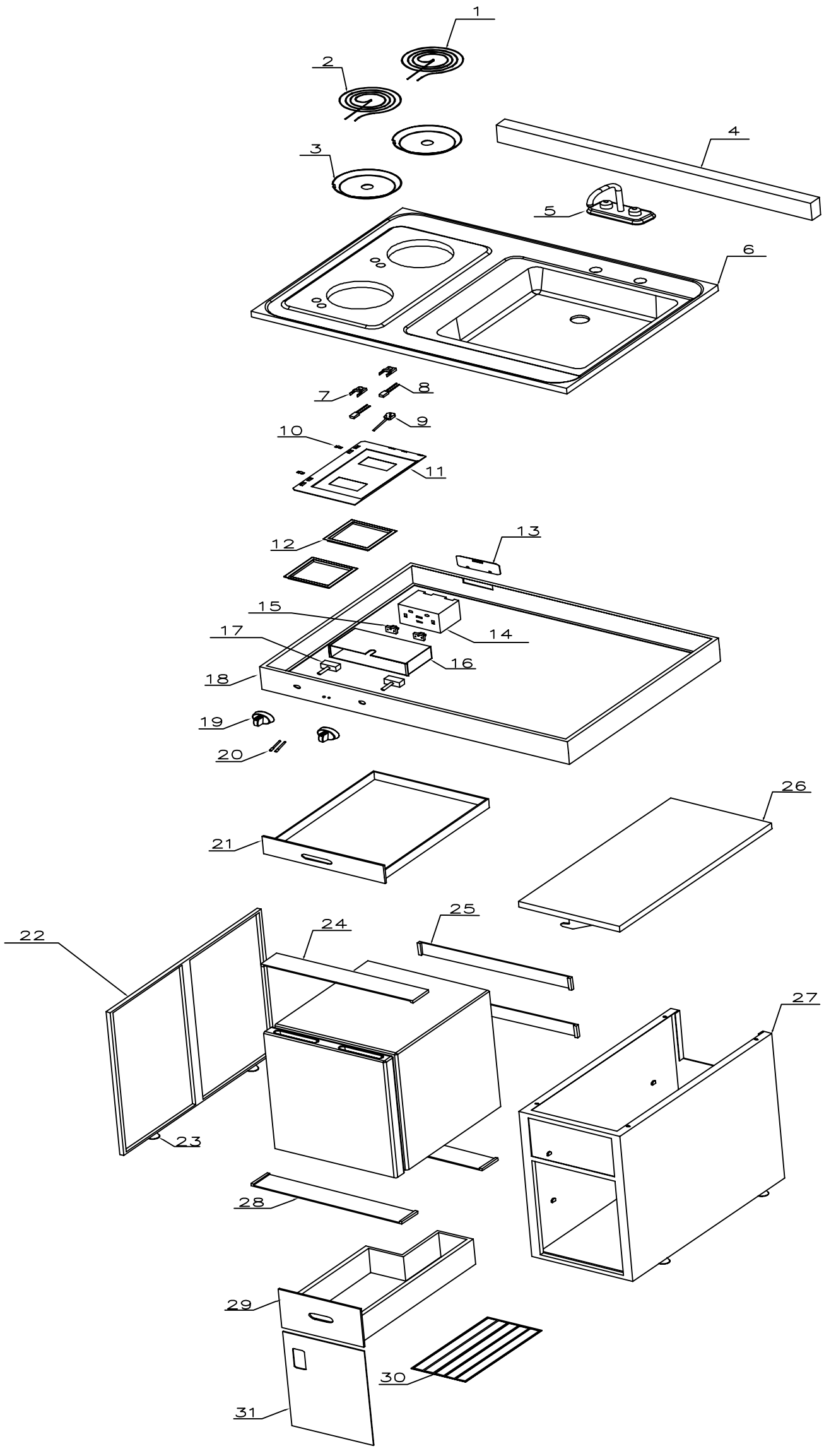
1
2
3
4
5
6
7
8
9
10
11
12
13
14
15
16
17
18
19
20
21
22
23
24
25
26
27
28
29
30
31

CK301SHP Parts List

No.	Part CODE	Description	Quantity
1	CK301SHP-01	500W burner	1
2	CK301SHP-02	900W burner	1
3	CK301SHP-03	Reflector bowl	2
4	CK301SHP-04	Backsplash	1
5	CK301SHP-05	Faucet	1
6	CK301SHP-06	S/steel countertop	1
7	CK301SHP-07	Metal Clip	2
8	CK301SHP-08	Connector	2
9	CK301SHP-09	Power supply cord for burner	1
10	CK301SHP-10	Clamp	3
11	CK301SHP-11	Electrical box tray	1
12	CK301SHP-12	Water drip tray	2
13	CK301SHP-13	Junction box door	1
14	CK301SHP-14	Junction box	1
15	CK301SHP-15	Receptacle	2
16	CK301SHP-16	Electrical box	1
17	CK301SHP-17	Power Switch	2
18	CK301SHP-18	Counter top holder	1
19	CK301SHP-19	Knob	2
20	CK301SHP-20	Indicating light	2
21	CK301SHP-21	Drawer	1
22	CK301SHP-22	Side plate	1
23	CK301SHP-23	Leg	6
24	CK301SHP-24	Reinforce plate	1
25	CK301SHP-25	Reinforce plate	2
26	CK301SHP-26	Side tray(Accessory)	1
27	CK301SHP-27	Bottom Cabinet	1
28	CK301SHP-28	Bottom Supporter Plate	2
29	CK301SHP-29	Drawer	1
30	CK301SHP-30	Shelf	1
31	CK301SHP-31	Door	1